Announcement

Dear Students,

I was under the impression that you all agreed to two class tests but it seems there is a disagreement, therefore

There will be only one class test on 27th April @ 7.00pm. This test will be on the first 8 lectures.

Question 1

Define the following terms, within the context of the speech production mechanism:

- Voiced Speech
- Unvoiced Speech
- Pitch Frequency.

Voiced Speech Vocal cord vibrate

Voiced sounds are produced when air from the lungs forces the vocal cords(fold) to oscillate (vibrate).

Oscillation frequency is called the **Pitch Frequency** (Hz) 基带频率

Unvoiced Speech Vocal cord doesn't vibrate

For unvoiced speech, the vocal cords are held open and air flows continuously through them.

There is no vibration of vocal cords as in voiced speech.

- The vocal tract (the cavity in human bodies), however is narrowed resulting in a turbulent flow air along the tract
- Unvoiced speech signal waveforms are "noisy" in appearance.

Pitch Frequency.

- Pitch is the fundamental frequency of vibration of the vocal cords. i.e. 50-200 Hz for male, 150-300 Hz for female and 200-400 for child speaker

Example

Voiced Speech

- The vowels /UH/, /IY/, and /EY/, and the liquid consonant /W/ (a consonant sound in which the tongue produces a partial closure in the mouth).
- Examples are the unvoiced sounds are/SH/ and /S/.

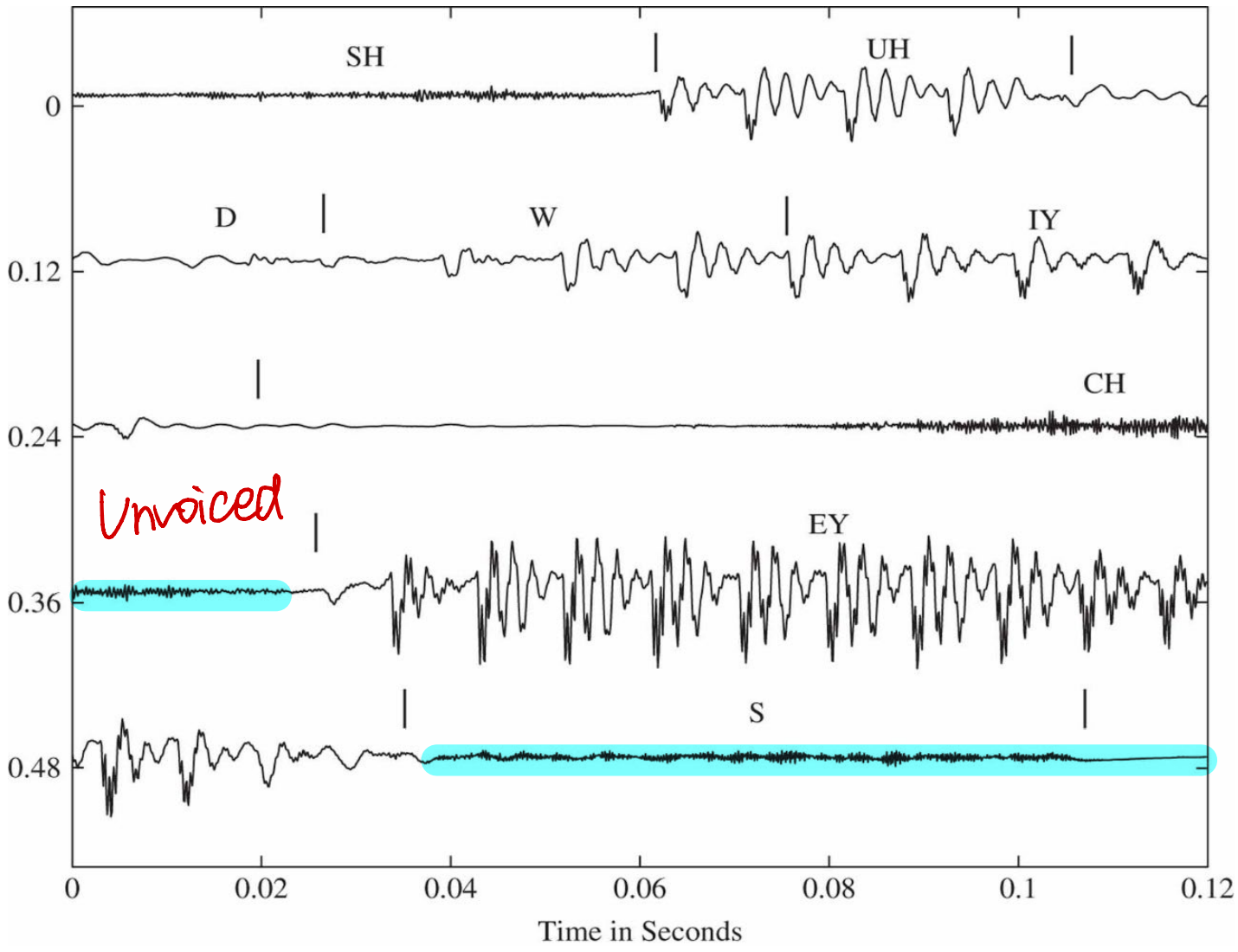

Copyright © 2011 Pearson Education, Inc. publishing as Prentice Hall

Question 2

- What are the main characteristics of Voiced and Unvoiced Speech:
  - in the time domain, and
  - in the frequency domain.

Voice
- T: 有规律
- F: 低频

Unvoice
- T: 无规律, 像噪声
- F: 高频

Voiced vs. Unvoiced Speech

Voice signal

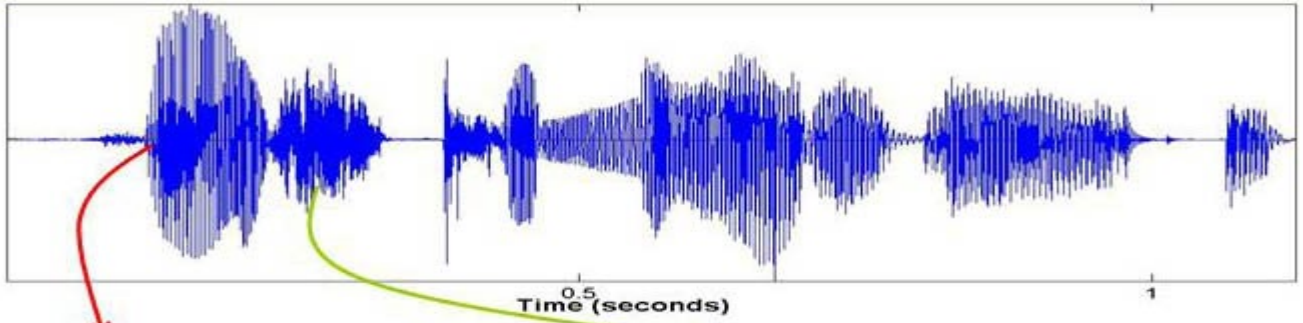

Time Domain

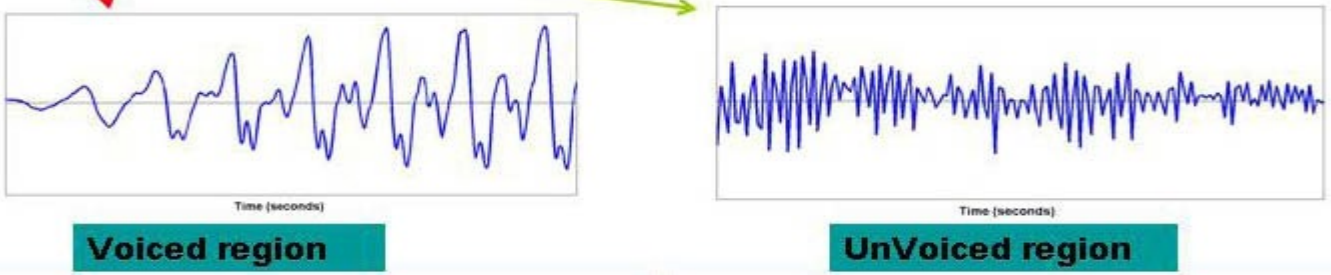

Frequency Domain

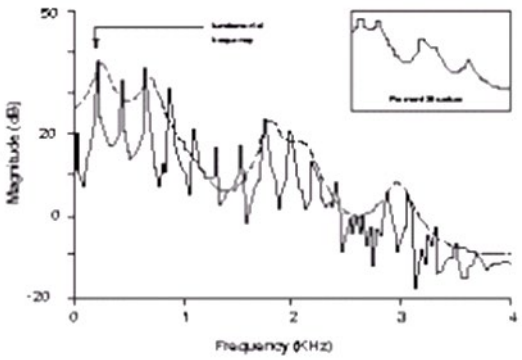

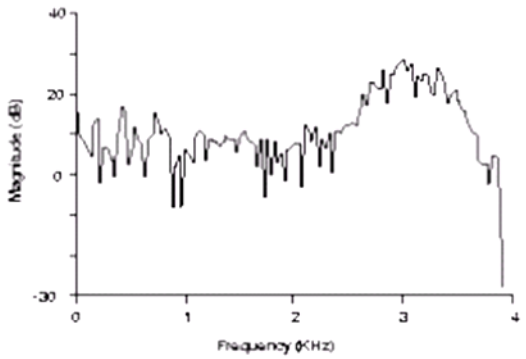

Question 3

Provide the general block diagram of a Speech Synthesis Process that is based on the “Binary Excitation Model”.

Speech Production Mechanism: Modelling

- Excitation can be modelled by a simple **binary excitation model** that provides:
  - A periodic pulse-type signal of the appropriate pitch frequency for **voiced sounds**.
  - A Noise signal for **unvoiced sounds**
- The **vocal tract** can be viewed/modelled as an "**Adaptive Filter**" with an appropriate frequency response for each specific speech sound.
- Speech can be therefore <u>synthesized</u> at the output of a structure that consists of
  - **An excitation model**
  - **A vocal tract model**

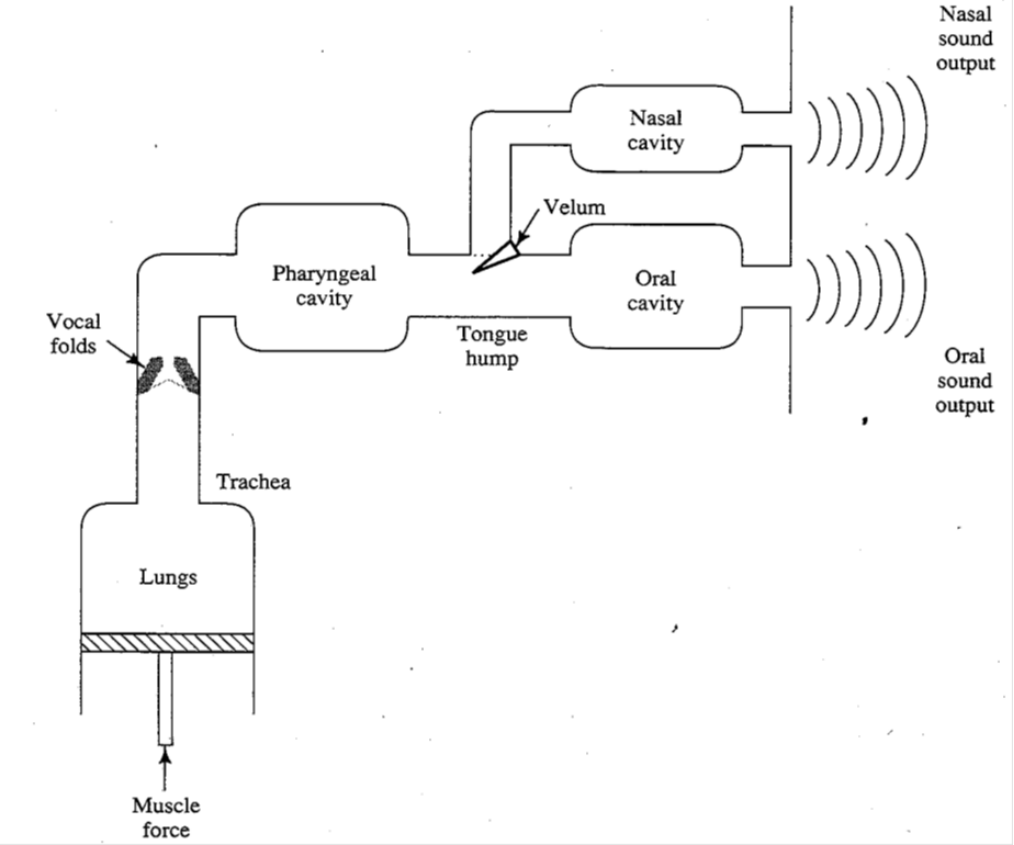

General Speech Synthesis Process

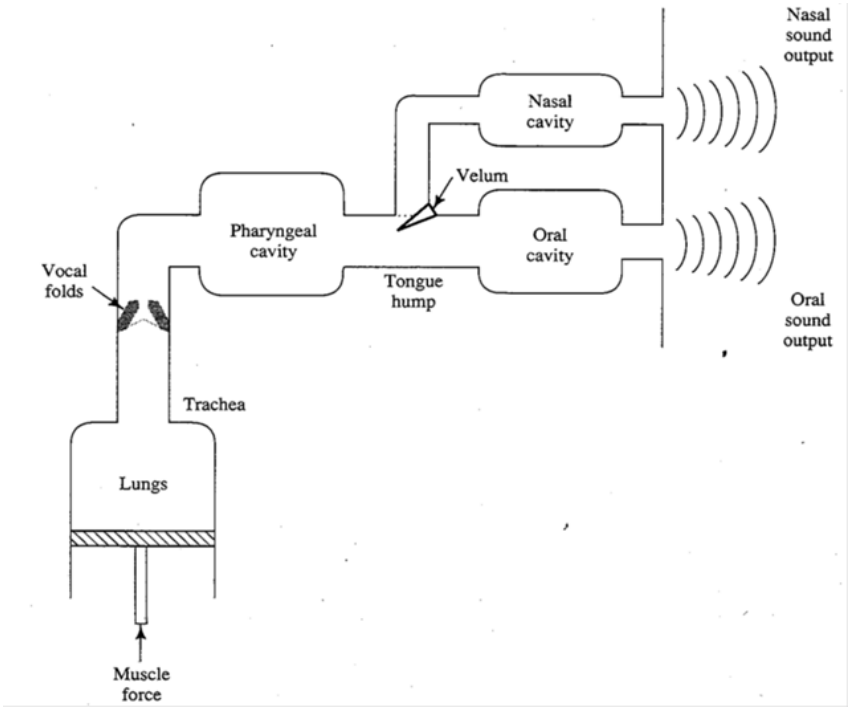

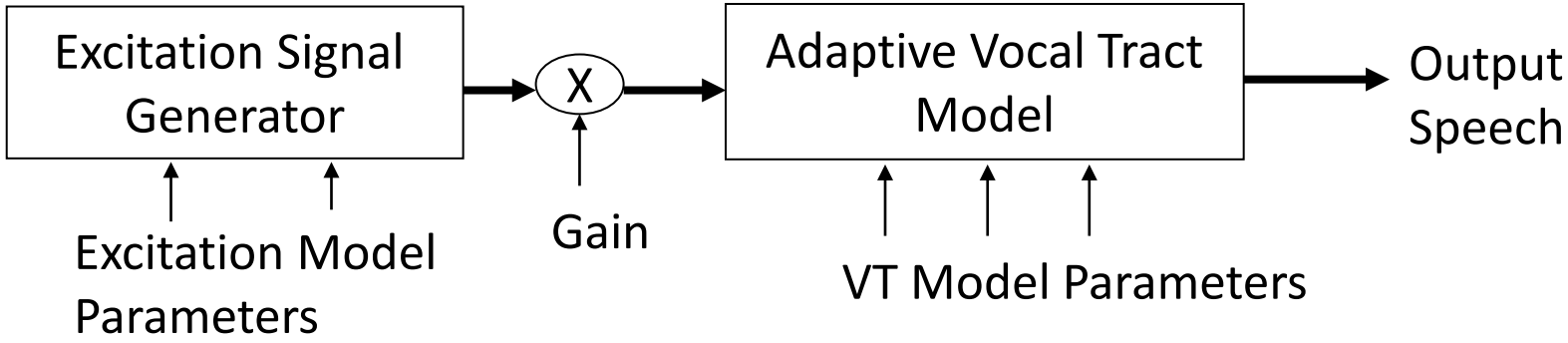

Binary Excitation Speech Synthesis

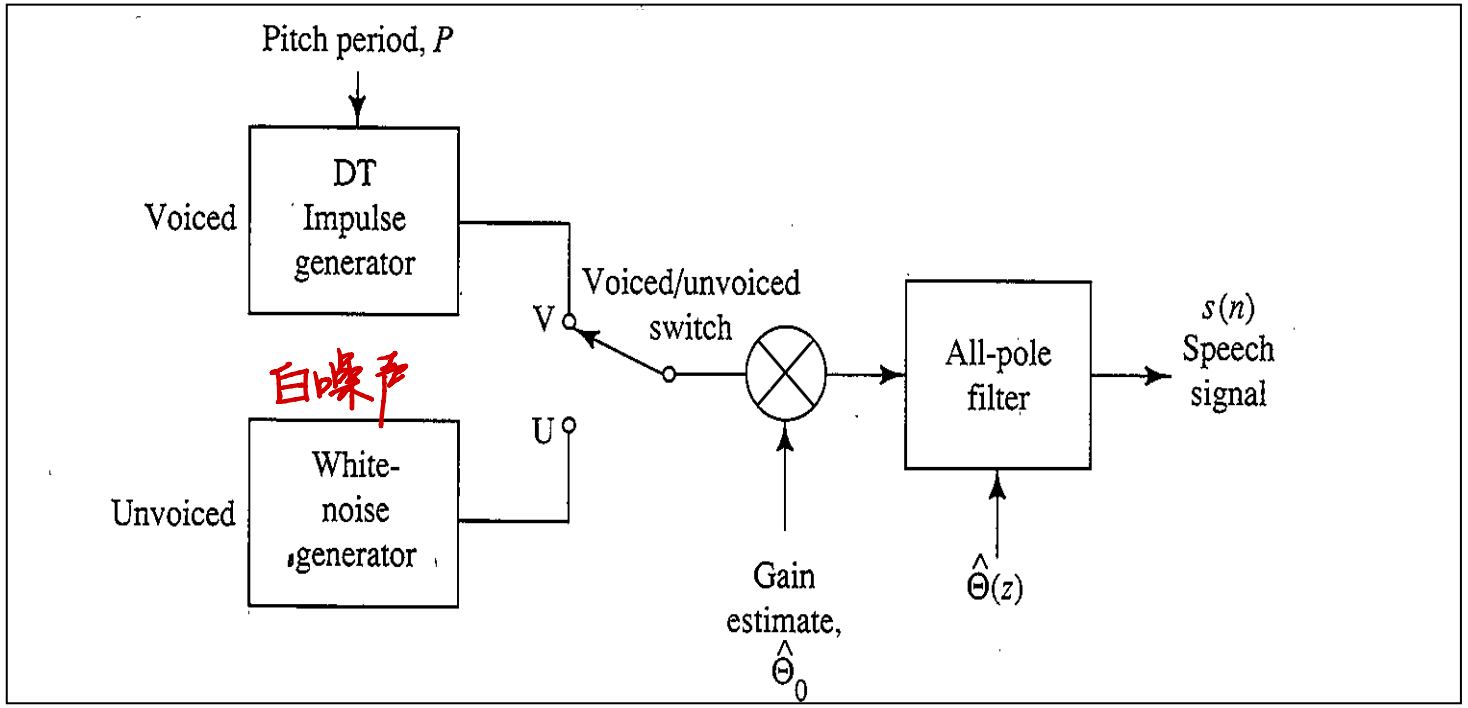

Binary Excitation based Speech Synthesis Process

Question 4

- What does the **general** sampling (Nyquist) theorem state?

- Homework

- The signal can be recovered if the sampling frequency is **at least twice** the highest signal frequency.

抽样频率至少为2倍的最高频率

Question 5

- What are the main aims of speech coding systems?

Answer

- The general aim of a Speech Coding process is to digitize the input signal using **the least number of bits per second** (minimum bit rate).
  用最少的比特率数字化
- Compression is achieved by exploiting the intrinsic properties of the signal.
- Thus speech coding algorithms **seek to remove redundant information** that exists in the speech and which, when transmitted, increases unnecessarily output bit rates.

Question 6

- Mention the broad types of speech coding systems and their bit rate range of operation.

Waveform Coders :

- bit rates of 16 Kb/sec and higher.
  - Time Domain (PCM, DPCM, ADPCM, etc)

Source Coders (Vocoders):

- low bit rates, usually 2.4 Kb/sec

Hybrid Coder : Low bit rates, 0.8 to 1.2 Kb/sec

Question 7

- Give three examples of waveform coders.

- Waveform encoding techniques are :
  - Pulse code modulation (PCM)
  - Differential PCM
  - Adaptive Differential PCM
  - Delta Modulation (DM)
  - Adaptive Delta Modulation (ADM)

Question 8

- Briefly explain the PCM encoder/decoder and delta modulation.

PCM

- PCM consists of three steps to digitize a speech signal:
  - Sampling
  - Quantization
  - Binary encoding

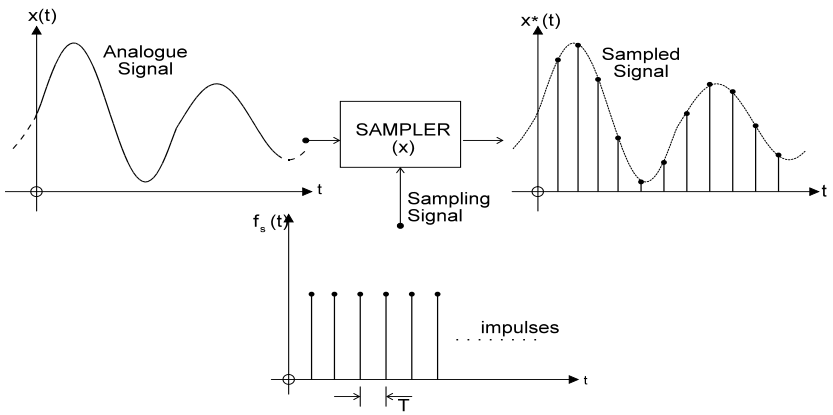

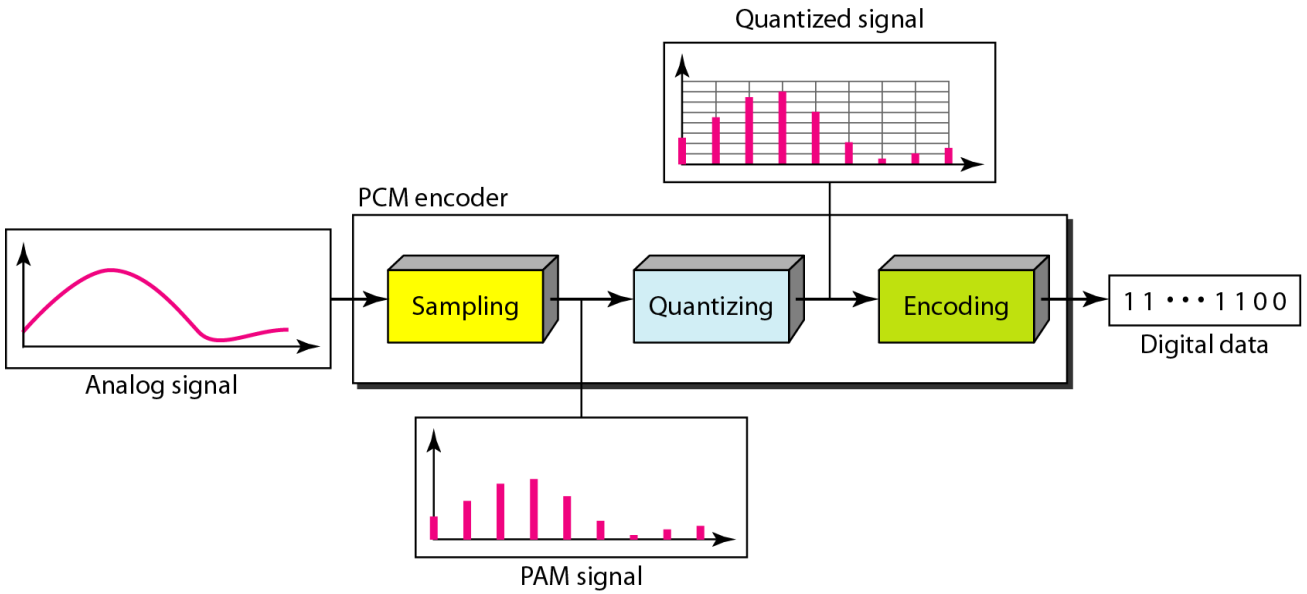

PCM Decoder

- To recover an analog signal from a digitized signal we follow the following steps:
  - We use a hold circuit that holds the amplitude value of a pulse till the next pulse arrives.
  - We pass this signal through a low pass filter with a cutoff frequency that is equal to the highest frequency in the pre-sampled signal.

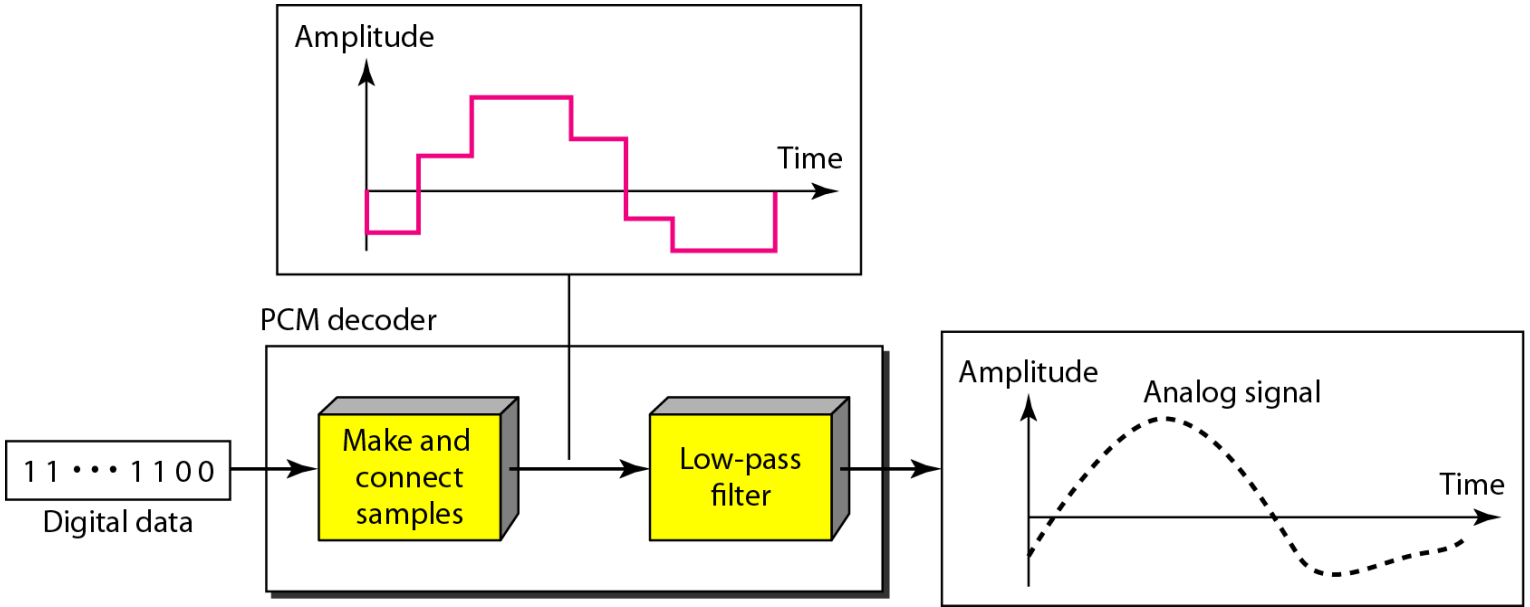

Delta Modulation

- This scheme sends only the difference between pulses, if the pulse at time t_{n+1} is higher in amplitude value than the pulse at time t_n, then a single bit, say a “1”, is used to indicate the positive value.
- If the pulse is lower in value, resulting in a negative value, a “0” is used.
- This scheme works well for small changes in signal values between samples.
- If changes in amplitude are large, this will result in large errors.

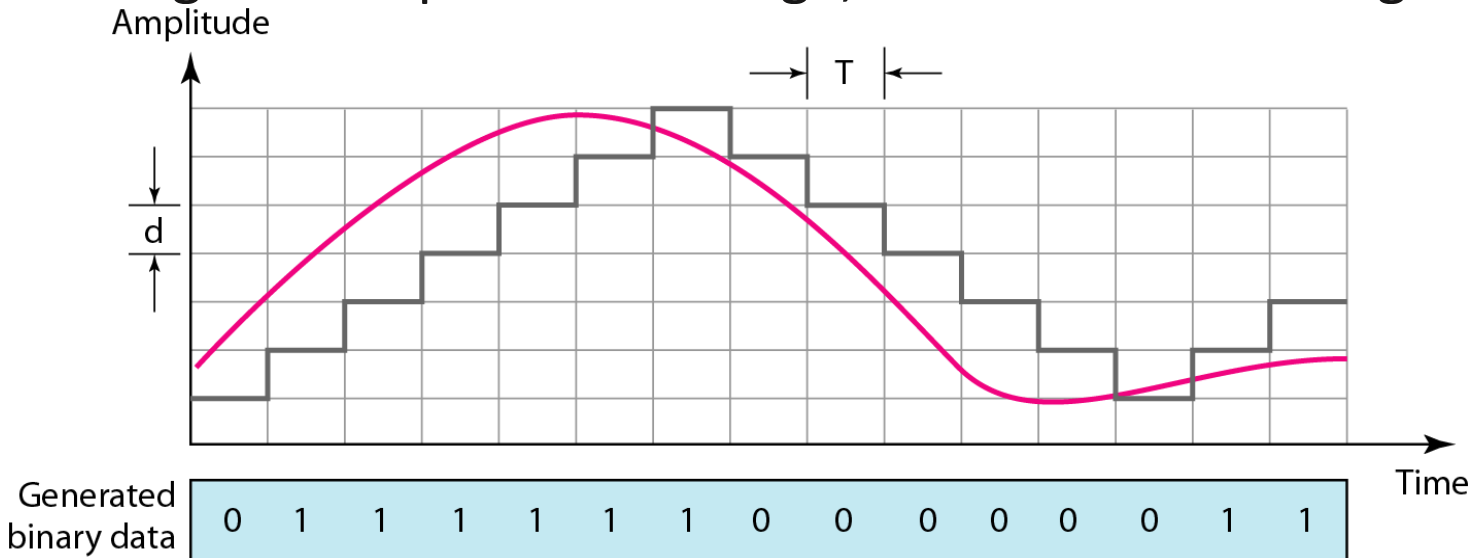

Question 9

- What do you understand by term quantisation error?

Quantization Error

- When a signal is quantized, we introduce an error - the coded signal approximates the actual amplitude value.
- The difference between actual and coded value (midpoint) is referred to as the quantization error.
- The more zones, the smaller Δ which results in smaller errors.
- BUT, the more zones the more bits required to encode the samples -> higher bit rate

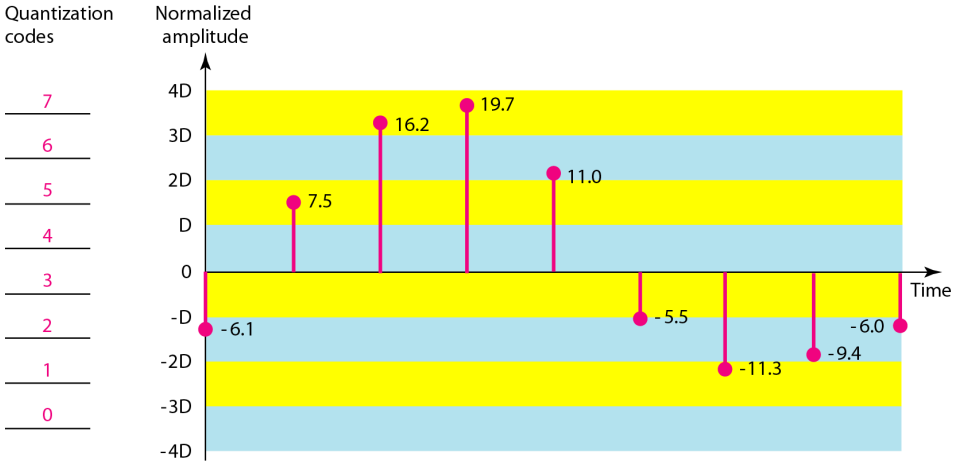

Normalized PAM values	-1.22	1.50	3.24	3.94	2.20	-1.10	-2.26	-1.88	-1.20
Normalized quantized values	-1.50	1.50	3.50	3.50	2.50	-1.50	-2.50	-1.50	-1.50
Normalized error	-0.38	0	+0.26	-0.44	+0.30	-0.40	-0.24	+0.38	-0.30
Quantization code	2	5	7	7	6	2	1	2	2
Encoded words	010	101	111	111	110	010	001	010	010

Question 10

- **The Pitch frequency is:**
  - The frequency of oscillation of the vocal tract
  - The frequency at which the vocal tract resonates
  - The dominant frequency in the speech signal
  - The frequency of oscillation of the vocal cords
  - None of the above
- The frequency of oscillation of the vocal cords

- **Different vocal tract (VT) configurations (shapes) result to:**
  - Different pitch frequencies
  - Different speech sounds
  - Different modes of speech production
  - Different energies in the speech signal
  - All of the above
- Different speech sounds

Question 11

Vocoders can operate at:

a) Very low bit rates with communications quality speech
b) High bit rates with network quality speech
c) Very low bit rates with synthetic quality speech
d) High or low bit rates with good or synthetic quality speech, respectively
e) None of the above

Very low bit rates with synthetic quality speech

- **The Pitch frequency is:**
  - The frequency of oscillation of the vocal tract
  - The frequency at which the vocal tract resonates
  - The dominant frequency in the speech signal
  - The frequency of oscillation of the vocal cords
  - None of the above
- **Different vocal tract (VT) configurations (shapes) result to:**
  - Different pitch frequencies
  - Different speech sounds
  - Different modes of speech production
  - Different energies in the speech signal
  - All of the above